A compact, high-performance linear grazer luminaire that combines technology and performance in a stylish design. Packed with features such as **EasyGlow**™ providing visual comfort technology, and the incredibly flexible adjustable and reversible constant torque bracket system. The L3 Lite is controllable as a full fixture through the use of **PowerSync**™ and provides superb color-over-angle consistency and blending of colors even at close blending distances.

Performance

Static White & Color[1]	Lumen Output (lm)	Efficacy (lm/W)	Peak Intensity (cd)
2,700 K (80 CRI)	3,360	77	123,900
3,000 K (80 CRI)	3,660	84	134,900
3,500 K (80 CRI)	3,810	87	140,400
4,000 K (80 CRI)	3,962	91	145,900
5,000 K (70 CRI)	3,660	84	134,900
Red	970	27	35,600
Green	3,850	89	141,800
Blue	970	22	35,600

[1] Static white lumen output values are based on 9 W/ft, 4 ft luminaire with 6° lens.

Dynamic Color[2]	Lumen Output (lm)	Efficacy (lm/W)	Peak Intensity (cd)
RGB	1,940	44	52,800
RGB with Royal Blue	1,980	45	63,900

[2] Dynamic Color lumen output values are based on 9 W/ft, 4 ft luminaire with 6° lens.

Beam Angles	6°, 15°, 30°, 45°, 60°, 10° x 40°, 20° x 40°, 10° x 60°, 20° x 60°

powersync™ easyglow™ cooldrive™ microantileach™

Electrical

LED Power	9 W / ft
Power Consumption	27 W (2 ft), 47 W (4 ft)
Lifetime (L70)	>60,000 hrs (B10, L70, TM21)
Input Voltage	120-277 Vac, 50/60 Hz
Thermal Management	**CoolDrive**™ onboard thermal monitoring and control

Control

Interface	Lumascape **PowerSync**™
Protocols[1]	DMX/RDM, Artnet (Ethernet Based), PWM[2], 0-10 V (sink or source)[2], Phase Dimming[2]
PWM Frequency	2 kHz flicker-free dimming to 0.1%
Control Resolution	Full luminaire Configurable via RDM
Systems	Range of third-party controllers

[1] Some protocols require additional hardware. For more information and other available protocols contact Lumascape.
[2] Not available for color-changing or tunable white.

Physical

Housing	Marine-grade extruded aluminum with tempered glass lens
Finish	Superior 9-step powder-coating process, including marine-grade epoxy undercoat and polyester top coat
Installation	Surface-mounted with included galvanic isolator
Adjustable	Multi-positional, constant torque locking bracket
Ambient Operating Temperature	-40 °F to 122 °F (-40 °C to 50 °C)
Surface Temperature	≤122 °F (50 °C)
Weight	6.2 lbs (2.8 kg) for 4 ft section
Effective Projected Area	0.5 ft^2 (484.8 cm^2) for 4 ft section

Certification & Compliance

IP Rating	IP66 / IP67 (Passes IP68 Test)
IK Rating	IK6
Vibration Resistance	3G Rating (ANSI C136.31)
Environment	Dry, Damp, Wet locations
Certifications	ETL, CE, RCM

Dimensions

2'

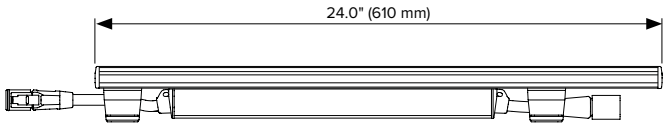

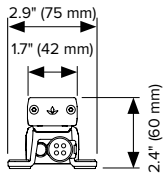

Fixed Bracket

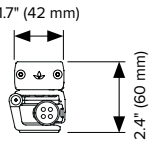

Adjustable Bracket

4'

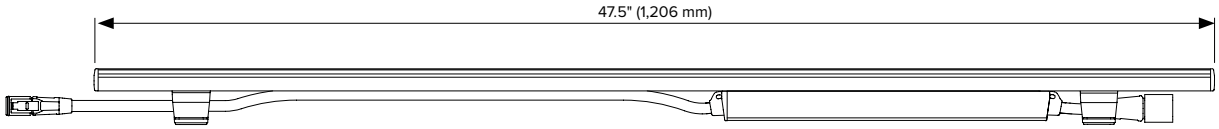

Luminaire Rotation

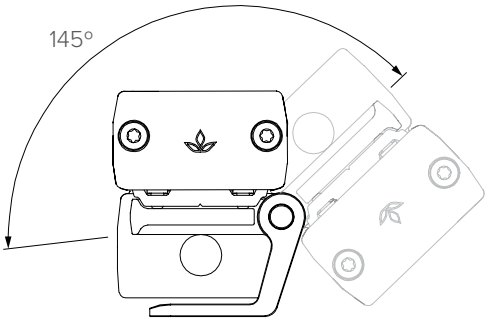

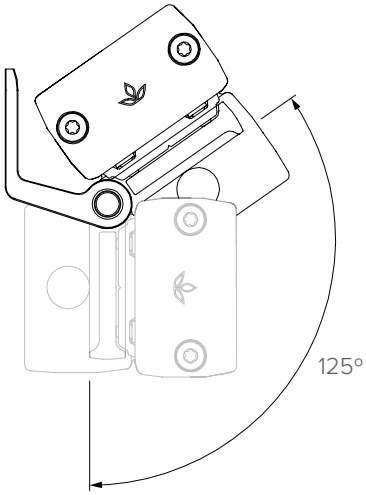

Specification Matrix

| LS9031 | – | 09D | | | | | | | | | | |

Light Engine	Code
9 W/ft	09D

Static White & Color	Code
2,700 K (80 CRI)	827
3,000 K (80 CRI)	830
3,500 K (80 CRI)	835
4,000 K (80 CRI)	840
5,000 K (70 CRI)	750
Red	RED
Green	GRN
Royal Blue	RBL

Dynamic Color	Code
RGB	RGB
RGB with Royal Blue	3BX

Connection Type	Code
Flexible single entry cable, for hardwired installations	84
Flexible single entry cable, for connectorized installations	77
Flexible entry / exit cables, for connectorized installations	73

For other cable entry options contact Lumascape.

Beam	Code
6°	VN[1]
15°	NM
30°	ME
45°	WD
60°	WF
10° x 60°	LH
10° x 60°	NH
20° x 40°	MH
20° x 60°	WH
100°	FL

[1] Not recommended for color-mixing.

Length	Code
2 ft – 24.0" (610 mm)	2
4 ft – 47.5" (1,206 mm)	4

Mounting	Code
Adjustable Bracket	A
Fixed Bracket	B

Input Voltage	Code
110-240 Vac, 50/60 Hz	01[1]
120-277 Vac, 50/60 Hz	09[2]

[1] International market
[2] North American market

Control	Code
Non-dimming	ND[1]
PowerSync™	PS[2]

[1] For single color, non-dimming applications.
[2] Required on all dimming and color-changing applications. LS6540 PowerSync™ Data Injector required (order sperately).

Finish	Code
Black	BL
Anthracite Grey	AG
Basalt Grey	BT
Anodic Silver	SL
White	WT
Dark Bronze	DB
Latte	LT
Dark Aluminum	DA
Custom RAL	CC[1]

[1] RAL color required

Luminaire Gap	Code
End-To-End (ETE)	000[1]
1 ft (0.3 m) Gap	001
2 ft (0.6 m) Gap	002
3 ft (0.9 m) Gap	003
6 ft (1.8 m) Gap	006

[1] Default - Minimum length for ETE connection.

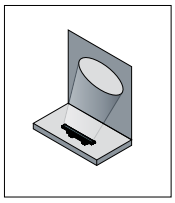

Beam Orientation for the "NH", "MH" and "WH" optical system

Accessories

Shielding & Glare Control
A variety of shielding and glare control options are available for the Linealux L3 Lite Series. Glare control accessories are available in 2 ft and 4 ft length options to suit base luminaires.

External / Slatted Louvre

LS6237 – ☐

Visor Length	Code
2 ft	2
4 ft	4

External Shield / Visor 1-sided

LS6238 – ☐ – ☐

Visor Length	Code
2 ft	2
4 ft	4

Finish	Code
Black	BL
Anthracite Grey	AG
Basalt Grey	BT
Anodic Silver	SL
White	WT
Dark Bronze	DB
Latte	LT
Dark Aluminum	DA
Custom RAL	CC[1]

[1] RAL color required

External Shield / Visor 3-sided

LS6239 – ☐ – ☐

Visor Length	Code
2 ft	2
4 ft	4

Finish	Code
Black	BL
Anthracite Grey	AG
Basalt Grey	BT
Anodic Silver	SL
White	WT
Dark Bronze	DB
Latte	LT
Dark Aluminum	DA
Custom RAL	CC[1]

[1] RAL color required

Network Topology – Dimming and Color-Changing via PowerSync4™

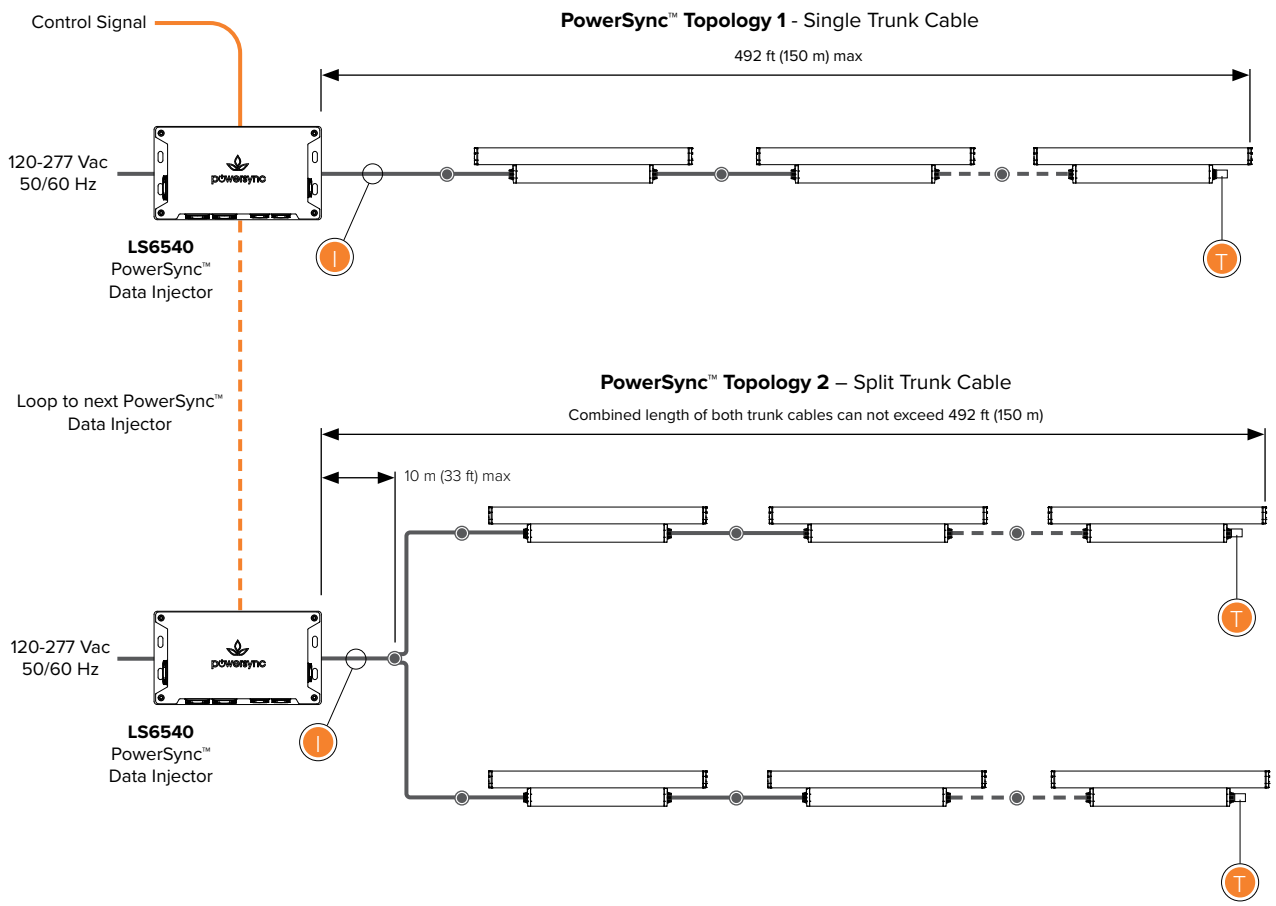

Up to 45 luminaires per run under the following conditions:

- Max total cable run length 492 ft (150 m) in up to two trunk cables.
- For run lengths in excess of 100 ft (30 m), the data wire gauge cannot exceed 14 AWG (2.5 mm²).
- For run lengths up to 100 ft (30 m), the data wire gauge is not governed.
- Refer to 'Maximum Circuit Load' table for circuit limitations.
- Always observe local electrical codes for branch circuit current limitations.

Maximum Circuit Load

Maximum Number of Fixtures per Circuit						
Luminaire Length	120V		240V		277V	
	Maximum Current					
	12.8 A	16 A	12.8 A	16 A	12.8 A	16 A
2 ft (610 mm)	45	45	45	45	45	45
	40	45	45	45	45	45
4ft (1,206 mm)	42	42	45	45	45	45
	20	26	40	45	45	45

Refer to PowerSync™ installation instructions for maximum distance information and topology options.
All connectorized options in North America are limited to 12.8A branch circuit load.
Above circuit loading limits are based on maximum circuit current capacity and PowerSync™ control capacity.
Cumulative earth leakage and voltage drop may need to be calculated.
For non-continuous runs contact factory for details.
Local wiring rules and requirements may limit circuit loadings refer to relevant electrical parameters to calculate.

Terminator

Use PowerSync™ terminator, supplied with leader cable to terminate last luminaire in chain.

Maximum Current

Maximum current through cables and connectors supplied by Lumascape:
≤12.8 A – Installations in North American Market (UL, ETL)
≤16 A – Installations in International Market (CE, CCC)

Connection Type

Circuits can be configured as either connectorized or hardwired. For details refer to installation instructions and comply with local electrical codes.

Network Topology – Non-Dimmable

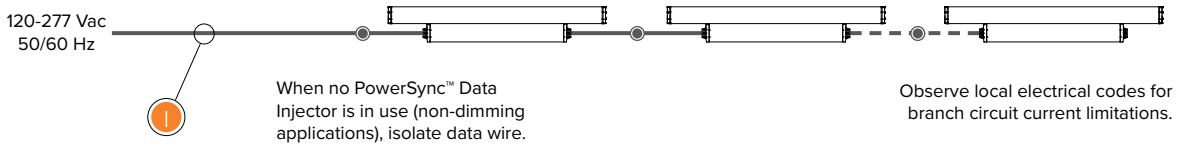

Up to 45 luminaires per run under the following conditions:

- Refer to 'Maximum Circuit Load' table for circuit limitations.
- Always observe local electrical codes for branch circuit current limitations.

Maximum Current

Maximum current through cables and connectors supplied by Lumascape:
≤12.8 A – Installations in North American Market (UL, ETL)
≤16 A – Installations in International Market (CE, CCC)

Connection Type

Circuits can be configured as either connectorized or hardwired. For details refer to installation instructions and comply with local electrical codes.

Maximum Circuit Load

Maximum Number of Fixtures per Circuit						
	120V		240V		277V	
	Maximum Current					
Luminaire Length	12.8 A	16 A	12.8 A	16 A	12.8 A	16 A
2 ft (610 mm)	45	45	45	45	45	45
	40	45	45	45	45	45
4 ft (1,206 mm)	42	42	45	45	45	45
	20	26	40	45	45	45

Refer to PowerSync™ installation instructions for maximum distance information and topology options.
All connectorized options in North America are limited to 12.8A branch circuit load.
Above circuit loading limits are based on maximum circuit current capacity. Cumulative earth leakage and voltage drop may need to be calculated.
For non-continuous runs contact factory for details.
Local wiring rules and requirements may limit circuit loadings refer to relevant electrical parameters to calculate.

PowerSync™ Connectorized Accessories

Leader Cables – PowerSync™ Line Voltage (For Connection Type 73 or 77 Only)

4-core 1.5 mm² for use in CE/CCC installations. Compatible with all Luminaires with Type 73 or 77 connectorized supply cable options. Supplied fitted with an IP68 connector for pairing with the first connectorized luminaire in a Powersync4, Line Voltage circuit. Comes complete with a matching End of Circuit, Powersync4, Line Voltage, Terminator Plug.

[ ] – [ ]

Cable Type	Code
1.5 mm²	LS6402C
2.5 mm²	LS6402C-2.5

Length	Code
3 m / 10 ft	010
10 m / 33 ft	032
15 m / 50 ft	050

Please Note:
Leader cable ships with 1 x connectorized PowerSync™ terminator.

Leader Cables – PowerSync™ Line Voltage Hook-Up Wire (For Connection Type 73 or 77 Only)

4 conductors 14 AWG Hook-Up wires for use in UL installations. Compatible with Type 73 or 77 connectorized supply cable options. Supplied fitted with an IP68 connector for pairing with the first connectorized luminaire in a Powersync4, Line Voltage circuit. Comes complete with a matching End of Circuit, Powersync4, Line Voltage, Terminator Plug.

For use in North America ONLY

[ ] – [ ]

Cable Type	Code
14 AWG 1.5 mm²	LS6402U

Length	Code
10 ft / 3 m	010
16 ft / 5 m	016
50 ft / 15 m	050

Please Note:
Leader cable ships with 1 x connectorized PowerSync™ terminator.

PowerSync™ Connectorized Accessories

Jumper Cables – PowerSync™ Line Voltage (For Connection Type 73 or 77 Only)

4-core 1.5 mm^2 or 2.5 mm^2 cable for use in CE/CCC installations. Compatible with all Luminaires with Type 73 or 77 connectorized supply cable options. Supplied fitted with an IP68 connector for extending between luminaires in a Powersync4, Line Voltage circuit where the input and output cables on a luminaire are not sufficient for placement of the luminaires.

Not suitable for use in North America

[ ] – [ ]

Cable Type	Code
1.5 mm^2	LS6404C
2.5 mm^2	LS6404C-2.5

Length	Code
0.3 m / 1 ft	001
0.6 m / 2 ft	002
1 m / 3 ft	003
1.2 m / 4 ft	004
2 m / 6 ft	006
3 m / 10 ft	010
5 m / 16 ft	016
8 m / 26 ft	026
10 m / 33 ft	032
15 m / 50 ft	050

Jumper Cables – PowerSync™ Line Voltage (For Connection Type 73 or 77 Only)

4-core 16 WAG for use in UL installations. Compatible with all Luminaires with Type 73 or 77 connectorized supply cable options. Supplied fitted with an IP68 connector for extending between luminaires luminaire in a Powersync4, Line Voltage circuit where the input and output cables on a luminaire are not sufficient for placement of the luminaires.

For use in North America

[ ] – [ ]

Cable Type	Code
16 AWG	LS6404U

Length	Code
1 ft / 0.3 m	001
2 ft / 0.6 m	002
3 ft / 1 m	003
4 ft / 1.2 m	004
6 ft / 2 m	006
10 ft / 3 m	010
16 ft / 5 m	016
26 ft / 8 m	026
33 ft / 10 m	032
50 ft / 15 m	050

PowerSync™ Connectorized Accessories

Terminator (Hardwired Installation)

Used in hardwired PowerSync™ installations.

Terminator	Code
DMX Terminator Hardwired (CCC, CE, UL)	LS6407
PowerSync™ Terminator Hardwired, Mains / Low Voltage (CCC, CE)	LS6406-01
PowerSync™ Terminator Hardwired, Mains / Low Voltage (UL)	LS6406-09
PowerSync™ Terminator Connectorized, Mains Voltage (CCC, CE, UL)	LS6417

Please Note:
Terminator ships with every LS6540. Order separately for spare parts only.

PowerSync™ Data Injector

Combines the convenience of standard wiring methods to translate control signals into a digital format that can be transmitted over standard copper wire. This allows highly granular addressing and high-speed digital control of every luminaire, using only four wires and accepts a growing list of standard protocols (0-10V, DMX / RDM), for simple integration with a wide selection of control systems using these industry standard protocols.

LS6540

Product	Code
Data Injector PS4	LS6540

PowerSync™ Y-Connectors

4 x 1.5mm² or 2.5mm² mains voltage Y-Connectos with Souriau plug for use in CE/CCC installations.

Not suitable for use in North America

Product	Code
1.5mm²	LS6425C
2.5mm²	LS6425C-2.5

Wire Colors & Designations

Mains Voltage – International Market

Designation	Color
Active	Brown
Neutral	Blue
Earth	Green / Yellow
Data	Black

Mains Voltage – North American Market

Designation	Color
Active	Black
Neutral	White
Earth	Green / Yellow
Data	Grey or Red