DISCONTINUED PRODUCT

humantouch™ gripglass™ OPTIONAL opticlear™ OPTIONAL microantileach™ OPTIONAL

1800 kg IP68 IK9 CE

The LS353LED ultra shallow inground luminaire is 124 mm deep and is specifically designed for applications where minimal depth is critical. The luminaire is suitable for use in high pedestrian traffic areas and can be used for drive-over applications. The shallow depth allows the housing to be integrated into suspended concrete slabs.

LS353LED Shallow Inground

SPECIFICATIONS

LED Source	LED 14 W or 20 W [1] ☐ White (4300 K typical) ■ Warm white (3000 K typical) ■ Blue (470 nm)
Adjustability	0-15° vertical tilt 365° horizontal rotation
IP Rating	IP68
Construction	Cover - 316 marine grade stainless steel Body - UV stabilised 30% glass filled PBT/PC high impact strength polymer
Installation Type	Direct burial *Drive-over, landscapes, etc.*
Drive-over	With **OptiClear™** or **GripGlass™** lens when the housing is encased in concrete
Static Load Rating	1800 kg
Impact Rating	IK9 with **OptiClear™** lens
Standard Inclusions	Teflon coated cover screws 25 mm conduit adaptor with cast resin or 3 m **MicroAntiLeach™** cable Driver with in-built thermal cutout Pre-installation cover kit Humidity absorbent desiccant
Ambient Operating Temperature	-20 °C to 45 °C
Warranty	10 year structural, 3 year LED and driver
Photometrics	Refer to page 19
Glass Temperature	**HumanTouch™** compliant ≤65 °C

NOTE: Product specifications are subject to change without notice. Any luminaire can become hot - take care with appropriate use and placement

[1] Nominal power consumption only, actual power consumed may vary.

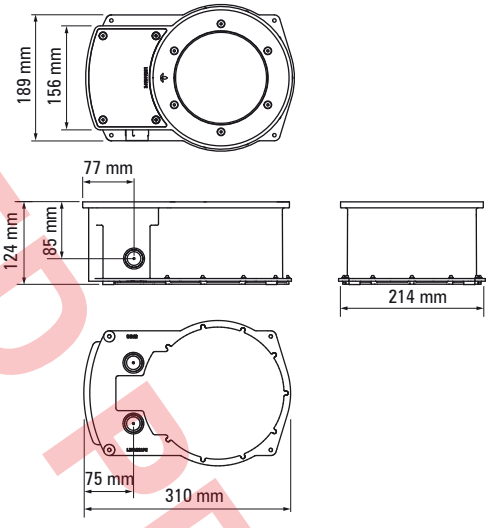

CONFIGURE THIS PRODUCT ›

LS353LED - [ ] [ ] [ ] [ ] [ ] [ ] [01]

WATTAGE

Description	Code
14 W	14
20 W	20

NOTE: Narrow beam applicable with 14 W only.

LED COLOUR

Description	Code
White (4300 K typical)	W4
Warm white (3000 K typical)	H6
Blue (470 nm)	B4

LENS

Name	Code
OptiClear™	A
GripGlass™	G

COVER

Material	Finish	Code
Stainless steel	Polished	M
	Brushed	N

CABLE ENTRY

Description	Code
25 mm conduit adaptor	88
Single gland entry [1] **MicroAntileach™**	84

[1] 3 m cable entry located at right hand side as standard unless otherwise specified.

OPTICAL SYSTEM

Beam		Code
Narrow	14°	NR
Medium	30°	ME
Linear horizontal	40° x 20°	LH
Linear vertical	20° x 40°	LV

NOTE: Beam angle values are nominal.

SUPPLY VOLTAGE

Voltage	Code
90-277 V AC 50/60 Hz	01

Copyright ©2012 Lumascape Lighting Industries Pty. Ltd. ABN 21 010 572 773